C40200L

CATTLE MANAGER C/W SCISSOR HEADBAIL
LEFT SIDE SPLIT GATE
RIGHT SIDE FILL IN
OPERTAOR STANDING ON THE LEFT SIDE OF CATTLE MANAGER.

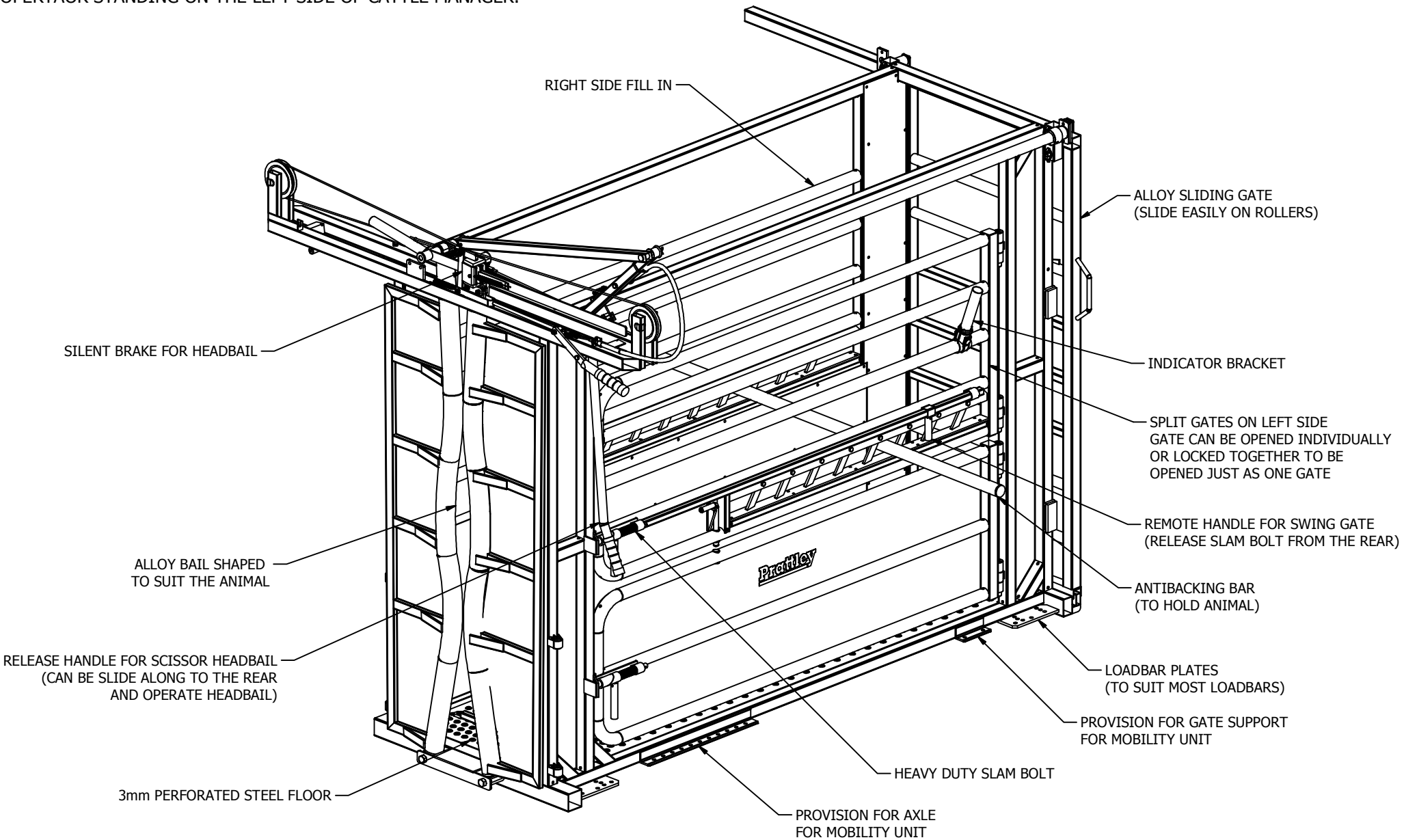

© Copyright.

Prattley
ANIMAL MANAGEMENT SYSTEMS